INSTALLATION INSTRUCTIONS

BUDDY WALL MOUNT BATH/SHOWER SET | CB030

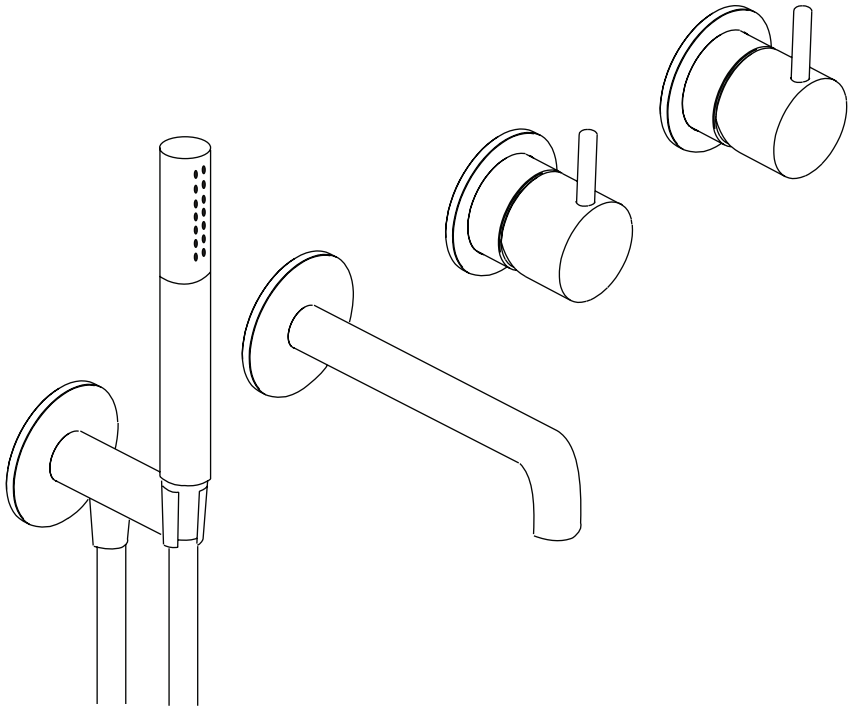

IMPORTANT!
Please read these instructions **prior** to installation

Distributed by:

Plumbline

T 04 568 9898 **E** sales@plumbline.co.nz
www.plumbline.co.nz

RECOMMENDATIONS FOR INSTALLATION

ATTENTION: **Failure to follow these recommendations may void the warranty. It is recommended that a qualified, licensed tradesperson install this product.**

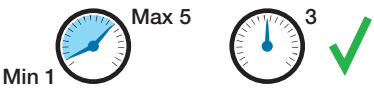

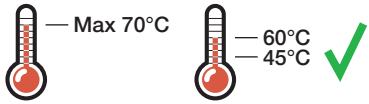

Water Pressure: 3 bar

Product performance cannot be guaranteed if pressure is less than 1 bar. Above 5 bar a pressure regulator must be installed. Failure to do so voids the product warranty.

Water Temperature: 45°-65°C

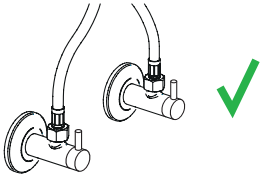

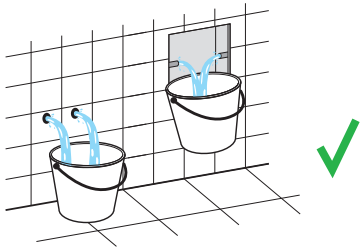

Stop Taps/Filters

When possible angle valves and/or filters are recommended to prevent impurities and debris

Pre-Flush

Always flush out the pipework before connecting any tapware. Failure to do so voids the product warranty.

CLEANING & MAINTENANCE

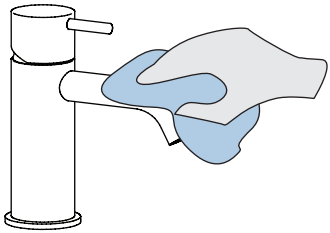

Cleaning

Clean with warm soapy water and a smooth cloth. Avoid abrasive sponges or detergents as these will damage the finish.

To preserve the finish it is recommend to apply a stainless steel oil/mineral oil on a monthly basis.

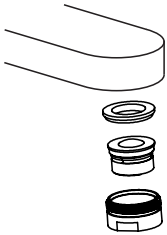

Aerator Maintenance

Remove the aerator, either with a spanner or an aerator cartridge key.

Immerse for half a day in water-vinegar solution (80-20%).

Wash, then reassemble.

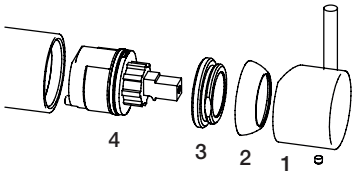

Cartridge Replacement

Before you start, turn off the water supply to the mixer.

1. Remove the handle
2. Unscrew the dome (hand tightened)
3. Unscrew the locking nut
4. Remove the cartridge

Re-assemble in reverse order

⚠ Max tightening torque on locking nut: 10-12 Nm

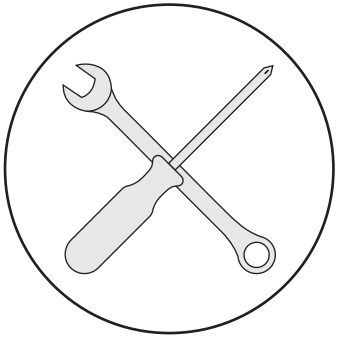

Warranty Information

For full details about our warranty visit **plumbline.co.nz/warranty-information**

BEFORE WALL LINING

1 Ensure the framing allows for the internals and wingbacks to be placed in the desired position.

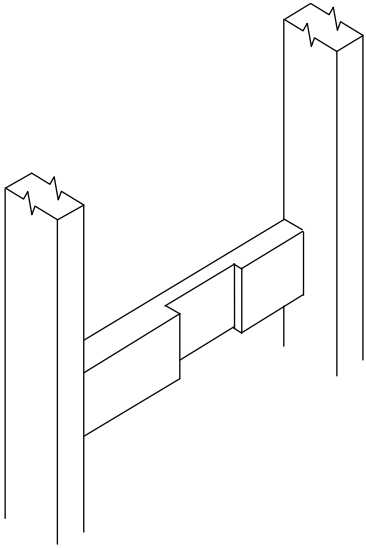

⚠ IMPORTANT!!

Please also note the diagram on how to set out the shower mixer with the diverter.

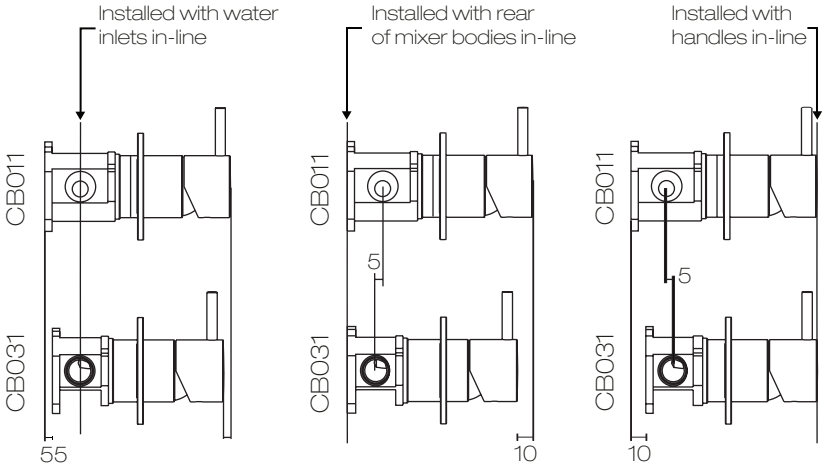

2 Fix the internals and wingbacks into place and run the piping between them. We recommend to run the piping as shown in the diagram.

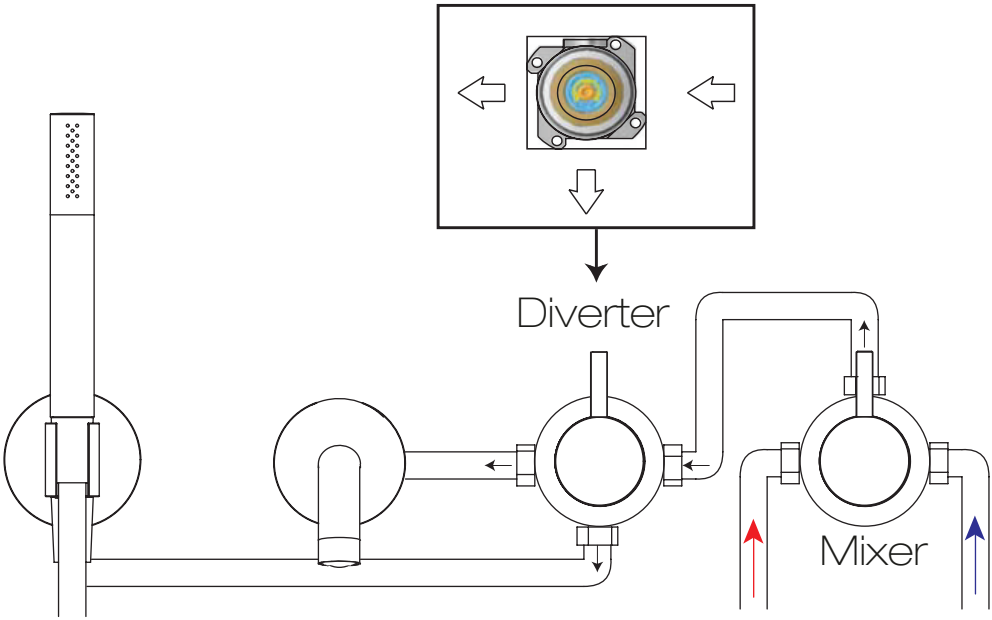

⚠ IMPORTANT

Prior to wall lining, all fittings must be checked for for leaks.

- Charge the system with mains pressure and plug both of the wingbacks.
- Open the valve and test for leaks while adjusting the diverter to both positions.
- Mains pressure only, max 800 KPA hydrostatic test.

DO NOT HYDROSTATIC TEST WITH MIXER OPEN!

AFTER WALL LINING

3 Remove the protective sleeves from the mixer and diverter, then install the externals.

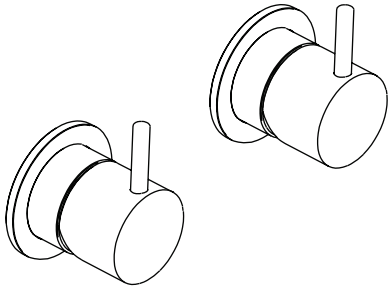

4 Apply thread sealent to the male threads on the sipogts and screw them into the wingbacks.

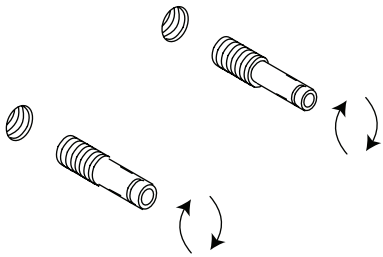

5 Finally fit off the externals of the spout and handshower.

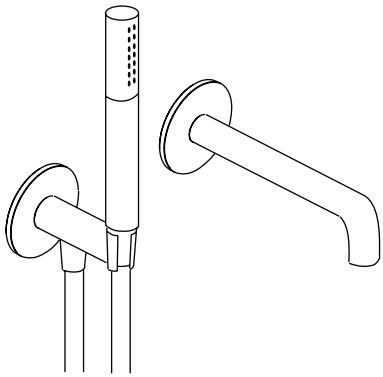

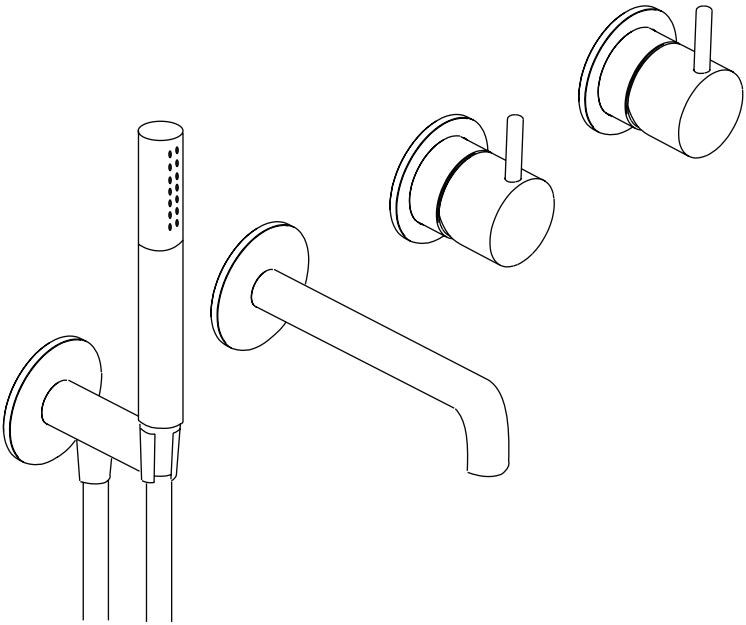

IMPORTANT!
Once Installed, test for for leaks and performance

For any questions or comments please contact us

Distributed by:

Plumbline

T 04 568 9898 **E** sales@plumbline.co.nz
www.plumbline.co.nz

V 29.11.2022